Work Order ID 68886

Monday, April 25, 2011 10:32:17 AM

Item ID: D4038-041 **Accept** **Setup Start**

Revision ID:

Item Name: Angle Assembly, Fwd, LH **Stop**

Start Date: 4/25/2011 **Start Qty:** 1.00 **Cust Item ID:**

Required Date: 4/26/2011 **Req'd Qty:** 1.00 **Customer:**

Reference: Rework

Approvals: **Process Plan:** mf **Date:** 11-04-25 **Tooling:** **Date:** **Run Start**

QC: **Date:** **SPC (Y/N):** **Date:** **Stop**

Sequence ID/ Work Center ID	Operation Description	Set Up/ Run Hours	Tool ID	Tool #	Plan Code	Accept Qty	Reject Qty	Reject Number	Insp. Stamp
Draw Nbr	**Revision Nbr**								
D4038	D U/R								
165		0.00							
Mill Conv	**Memo**	0.00							
Conventional Milling Machine	PULL FROM STOCK D4038-041 B 67548		11/05/25			1			
	REWORK PER DRAWING D4038-041								
170	QC5- Inspect part completeness to step on W/O	0.00							
QC	**Memo**	0.00	11/05/26			41			
Quality Control						41			
180	Identify as per dwg & Stock Location: 138	0.00							
Packaging	**Memo**	0.00				11/5/26			
Packaging	ID AND STOCK UNDER NEW BATCH NUMBER								

Dart Aerospace Ltd

W/O:		WORK ORDER CHANGES					
DATE	**STEP**	**PROCEDURE CHANGE**	**By**	**Date**	**Qty**	**Approval** Chief Eng / Prod Mgr	**Approval** QC Inspector

Part No: _____ **PAR #:** _____ **Fault Category:** _____ **NCR:** Yes No **DQA:** _____ **Date:** _____

Resolution: _____ **Disposition:** _____ **QA: N/C Closed:** _____ **Date:** _____

NCR:		WORK ORDER NON-CONFORMANCE (NCR)						
DATE	**STEP**	**Description of NC** Section A	**Corrective Action** Section B			**Verification** Section C	**Approval** Chief Eng	**Approval** QC Inspector
			Initial Chief Eng	**Action Description** Chief Eng	**Sign & Date**			

NOTE: Date & initial all entries

Work Order ID 68886

Monday, April 25, 2011 10:32:17 AM

Item ID: D4038-041 **Accept** **Setup Start**

Revision ID: **Stop**

Item Name: Angle Assembly, Fwd, LH

Start Date: 4/25/2011 **Start Qty:** 1.00 **Cust Item ID:**

Required Date: 4/26/2011 **Req'd Qty:** 1.00 **Customer:**

Reference:

Run Start

Approvals: **Process Plan:** _____ **Date:** _____ **Tooling:** _____ **Date:** _____

Stop

QC: _____ **Date:** _____ **SPC (Y/N):** _____ **Date:** _____

Sequence ID/ Work Center ID	Operation Description	Set Up/ Run Hours	Tool ID	Tool #	Plan Code	Accept Qty	Reject Qty	Reject Number	Insp. Stamp
190	QC21- Final Inspection - Work Order Release	0.00						11|5|30	
QC Quality Control	**Memo**	0.00							

LLLUS.26

Dart Aerospace Ltd

W/O:		WORK ORDER CHANGES					
DATE	STEP	PROCEDURE CHANGE	By	Date	Qty	Approval Chief Eng / Prod Mgr	Approval QC Inspector

Part No: _____ **PAR #:** _____ **Fault Category:** _____ **NCR:** Yes No **DQA:** _____ **Date:** _____

Resolution: _____ **Disposition:** _____ **QA: N/C Closed:** _____ **Date:** _____

NCR:		WORK ORDER NON-CONFORMANCE (NCR)						
DATE	STEP	Description of NC Section A	Corrective Action Section B			Verification Section C	Approval Chief Eng	Approval QC Inspector
			Initial Chief Eng	Action Description Chief Eng	Sign & Date			

NOTE: Date & initial all entries

H:\fFORMS\Quality Assurance\approved QA\NCRWO RevE

Location/Lot Activity

Monday, April 25, 2011 10:33:02 AM

Criteria : All Items All Locations Lot: 67548 All Transaction Types All Dates Report on Locations & Lots

Transaction Type	Item ID/ Item Name	Warehouse / Location ID	Reason	Employee ID / Location Code	Loc Trans Date	LocQtyPrior/ Location Qty	Lot Number	LotQtyPrior/ Lot Qty	Shelf Life Date / Lot Code	Extended Cost
Issue	D4038-041 / Angle Assembly, Fwd, LH	Main Warehouse	67514	DESJ02		3.0000		3.0000		
		ST115			4/6/2011	-1.0000	67548	-1.0000		($89.83)
		Main Warehouse	67515	DESJ02		2.0000		2.0000		
		ST115			4/6/2011	-1.0000	67548	-1.0000		($89.83)
								-2.0000		**($179.66)**
Rework	D4038-041 / Angle Assembly, Fwd, LH	Main Warehouse	68886	FAUT01		1.0000		1.0000		
		ST115			4/25/2011	-1.0000	67548	-1.0000		($89.83)
								-1.0000		**($89.83)**
WIP Receipt	D4038-041 / Angle Assembly, Fwd, LH	Main Warehouse	67548	FAUT01		0.0000		0.0000		
		ST115			4/5/2011	3.0000	67548	3.0000		$269.49
								3.0000		**$269.49**

Dart Aerospace Ltd

W/O:		WORK ORDER CHANGES					
DATE	STEP	PROCEDURE CHANGE	By	Date	Qty	Approval Chief Eng / Prod Mgr	Approval QC Inspector

Part No: _____ **PAR #:** _____ **Fault Category:** _____ **NCR:** Yes No **DQA:** _____ **Date:** _____

Resolution: _____ **Disposition:** _____ **QA: N/C Closed:** _____ **Date:** _____

NCR:		WORK ORDER NON-CONFORMANCE (NCR)						
DATE	STEP	Description of NC Section A	Corrective Action Section B			Verification Section C	Approval Chief Eng	Approval QC Inspector
			Initial Chief Eng	Action Description Chief Eng	Sign & Date			

NOTE: Date & initial all entries

ITEM NO.	QTY. -041	QTY. -042	PART NUMBER	DESCRIPTION
1	X		D4038-041	ANGLE ASSEMBLY, FWD, LH
2		X	D4038-042	ANGLE ASSEMBLY, FWD, RH
3	1		D4038-1	ANGLE, FWD, LH
4		1	D4038-2	ANGLE, FWD, RH
5	1		D4038-5	BLOCK
6		1	D4038-6	BLOCK
7	1		D4038-9	BLOCK
8		1	D4038-10	BLOCK
9	2	2	AN3-14A	BOLT
10	2	2	MS21042L3	NUT
11	4	4	NAS1149D0363J	WASHER (AN960JD10)

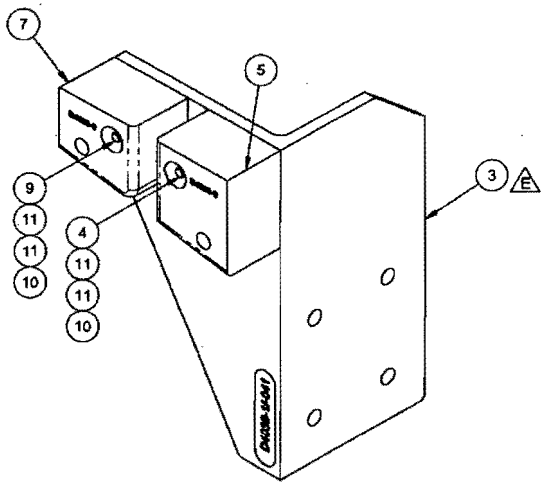

D4038-041 ANGLE ASSEMBLY, FWD, LH

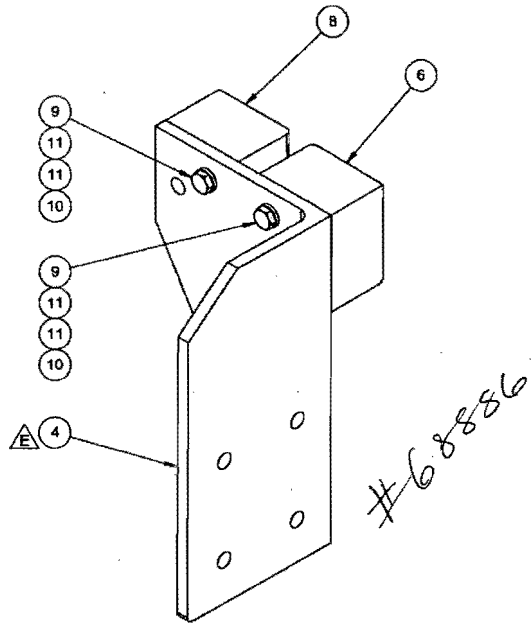

D4038-042 ANGLE ASSEMBLY, FWD, RH

RELEASED 2011-04-31

NOTES:
1) MATERIAL: N/A
2) FINISH: POWDER COAT "WHITE" (4.3.5.1) PER DART QSI 005 4.3
3) TOLERANCES: PER DART QSI 018 UNLESS OTHERWISE NOTED
4) UNITS: INCHES UNLESS OTHERWISE NOTED
5) BREAK SHARP EDGES: 0.005 TO 0.010 MAX
6) IDENTIFICATION: N/A
7) WEIGHT: -041 - 1.75 lbs
-042 - 1.74 lbs

REV.	DESCRIPTION	BY	DATE
E	1.19 X 1.00 CHAMFER WAS R1.00. REF: NCR11-543.	MB	11.04.11
D	REVISED D4038-7/-8/-11/-12 AS FOLLOWS: 1.87 WAS 1.73 (C7-9); 2.14 WAS 2.00 (C4-9); 2.13 WAS 2.00 (C7-10); 1.86 WAS 1.73 (C4-10); 1.52 WAS 1.38 (C7-13); 1.79 WAS 1.65 (C4-13); 1.77 WAS 1.65 (C7-14); 1.49 WAS 1.38 (C4-14). REASON: NCR11-456.	MB	11.03.03
C	REVISED D4038-3/-4 AS FOLLOWS: 0.589 WAS 0.714 (B2-5, B4-6); D4038-043/-044 ARE AFFECTED. REASON: NCR11-399.	MB	11.01.20
B	REVISED DIMENSIONS ALL SHEETS, ADD Ø0.316 HOLES IN -1/-2/-3/-4 PARTS, ADD RADIUS TO -1/-2/-3/-4 PARTS	HS	10.01.05
A	NEW ISSUE	HS	09.12.14

DESIGN		DART AEROSPACE LTD HAWKESBURY, ONTARIO, CANADA
DRAWN		
CHECKED		DRAWING NO. D4038 — REV. E — SHEET 1 OF 14
MFG. APPR.		
APPROVED		TITLE: BRACKET — SCALE: NTS
DE APPR.		
DATE	11.04.11	

COPYRIGHT © 2009 BY DART AEROSPACE LTD
THIS DOCUMENT IS PRIVATE AND CONFIDENTIAL AND IS SUPPLIED ON THE EXPRESS CONDITION THAT IT IS NOT TO BE USED FOR ANY PURPOSE OR COPIED OR COMMUNICATED TO ANY OTHER PERSON WITHOUT WRITTEN PERMISSION FROM DART AEROSPACE LTD.

Dart Aerospace Ltd

W/O:		WORK ORDER CHANGES					
DATE	STEP	PROCEDURE CHANGE	By	Date	Qty	Approval Chief Eng / Prod Mgr	Approval QC Inspector

Part No: _____ **PAR #:** _____ **Fault Category:** _____ **NCR:** Yes No **DQA:** _____ **Date:** _____

Resolution: _____ **Disposition:** _____ **QA: N/C Closed:** _____ **Date:** _____

NCR:		WORK ORDER NON-CONFORMANCE (NCR)						
DATE	STEP	Description of NC Section A	Corrective Action Section B			Verification Section C	Approval Chief Eng	Approval QC Inspector
			Initial Chief Eng	Action Description Chief Eng	Sign & Date			

NOTE: Date & initial all entries

H:\f\FORMS\Quality Assurance\approved QA\NCRWO RevE

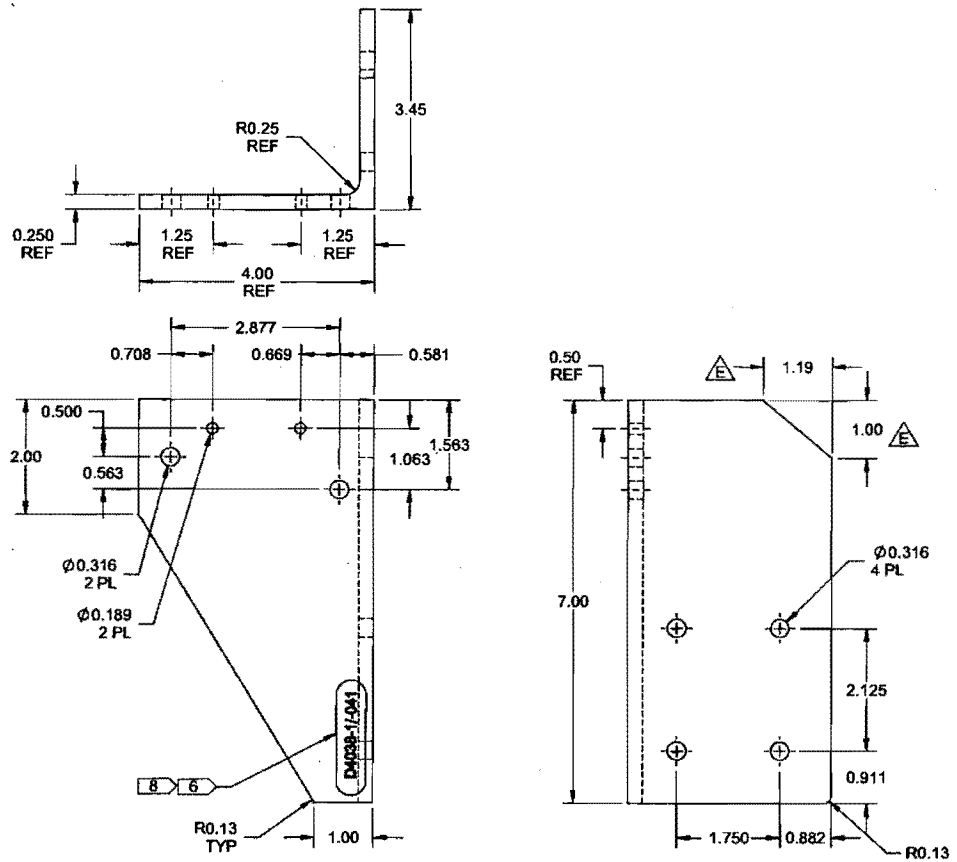

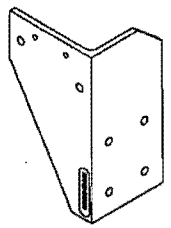

#68886

RELEASED
2011-04-21

D4038-1 ANGLE, FWD, LH

NOTES:
1) MATERIAL: 6061-T6/T6510/T6511 ALUMINUM ANGLE, 4.000 X 4.000 X 0.250
PER AMS-QQ-A-200/8
REF DART SPEC M6061T6A4.000XW250
2) FINISH: CHEMICAL CONVERSION COAT PER DART QSI 005 4.1
3) TOLERANCES: PER DART QSI 018 UNLESS OTHERWISE NOTED
4) UNITS: INCHES UNLESS OTHERWISE NOTED
5) BREAK SHARP EDGES: 0.005 TO 0.010 MAX
6) IDENTIFICATION: ENGRAVE P/N IN THIS AREA AS SHOWN (NEAR SIDE ONLY) TO MAX
DEPTH OF 0.010 IN 0.18 HIGH LETTERS WITH MIN RADIUS TOOL OF 0.015
7) WEIGHT: 1.03 lbs
8) SPOT FACE MAX DEPTH OF 0.010 PRIOR TO MARKING

DESIGN		DART AEROSPACE LTD HAWKESBURY, ONTARIO, CANADA
DRAWN		
CHECKED		DRAWING NO. D4038 — REV. E — SHEET 3 OF 14
MFG. APPR.		
APPROVED		TITLE: BRACKET — SCALE: NTS
DE APPR.		
DATE	11.04.11	

COPYRIGHT © 2009 BY DART AEROSPACE LTD
THIS DOCUMENT IS PRIVATE AND CONFIDENTIAL AND IS SUPPLIED ON THE EXPRESS CONDITION THAT IT IS NOT TO BE USED FOR ANY PURPOSE OR COPIED OR COMMUNICATED TO ANY OTHER PERSON WITHOUT WRITTEN PERMISSION FROM DART AEROSPACE LTD.

Dart Aerospace Ltd

W/O:		WORK ORDER CHANGES					
DATE	STEP	PROCEDURE CHANGE	By	Date	Qty	Approval Chief Eng / Prod Mgr	Approval QC Inspector

Part No: _____ **PAR #:** _____ **Fault Category:** _____ **NCR:** Yes No **DQA:** _____ **Date:** _____

Resolution: _____ **Disposition:** _____ **QA: N/C Closed:** _____ **Date:** _____

NCR:		WORK ORDER NON-CONFORMANCE (NCR)						
DATE	STEP	Description of NC Section A	Corrective Action Section B			Verification Section C	Approval Chief Eng	Approval QC Inspector
			Initial Chief Eng	Action Description Chief Eng	Sign & Date			

NOTE: Date & initial all entries

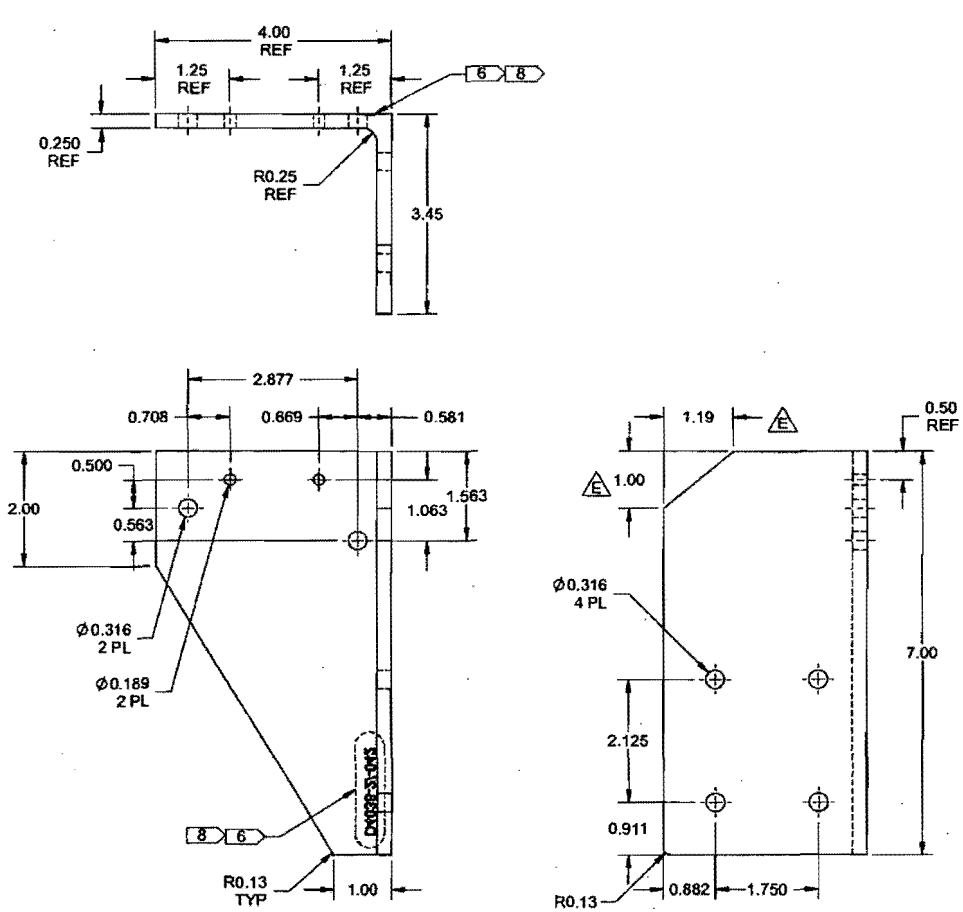

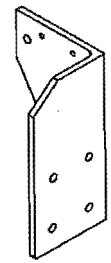

#66856

RELEASED
2011-04-21

D4038-2 ANGLE, FWD, RH

NOTES:
1) MATERIAL: 6061-T6/T6510/T6511 ALUMINUM ANGLE, 4.000 X 4.000 X 0.250
PER AMS-QQ-A-200/8
REF DART SPEC M6061T6A4.000XW250
2) FINISH: CHEMICAL CONVERSION COAT PER DART QSI 005 4.1
3) TOLERANCES: PER DART QSI 018 UNLESS OTHERWISE NOTED
4) UNITS: INCHES UNLESS OTHERWISE NOTED
5) BREAK SHARP EDGES: 0.005 TO 0.010 MAX
6) IDENTIFICATION: ENGRAVE P/N IN THIS AREA AS SHOWN (FAR SIDE ONLY) TO MAX
DEPTH OF 0.010 IN 0.18 HIGH LETTERS WITH MIN RADIUS TOOL OF 0.015
7) WEIGHT: 1.03 lbs
8) SPOT FACE MAX DEPTH OF 0.010 PRIOR TO MARKING

DESIGN		DART AEROSPACE LTD HAWKESBURY, ONTARIO, CANADA
DRAWN		
CHECKED		DRAWING NO. D4038 — REV. E — SHEET 4 OF 14
MFG. APPR.		
APPROVED		TITLE: BRACKET — SCALE: NTS
DE APPR.		
DATE	11.04.11	

COPYRIGHT © 2009 BY DART AEROSPACE LTD
THIS DOCUMENT IS PRIVATE AND CONFIDENTIAL AND IS SUPPLIED ON THE EXPRESS CONDITION THAT IT IS NOT TO BE USED FOR ANY PURPOSE OR COPIED OR COMMUNICATED TO ANY OTHER PERSON WITHOUT WRITTEN POSSESSION FROM DART AEROSPACE LTD.